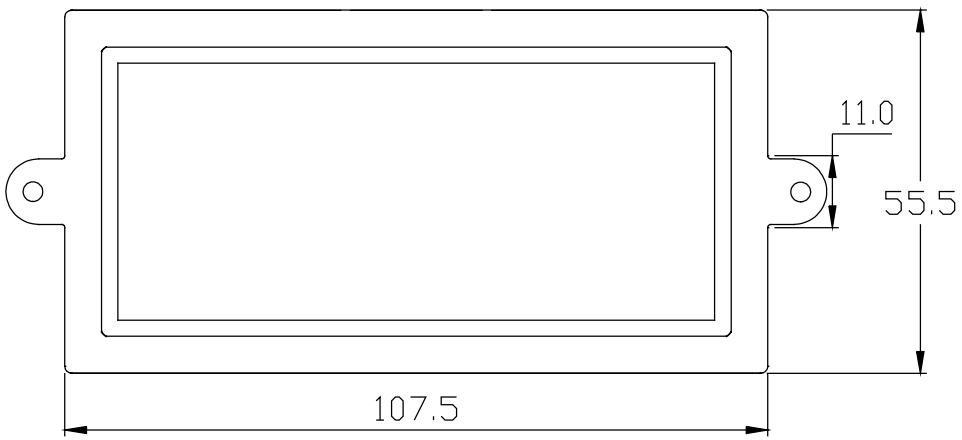
11.0
55.5
107.5

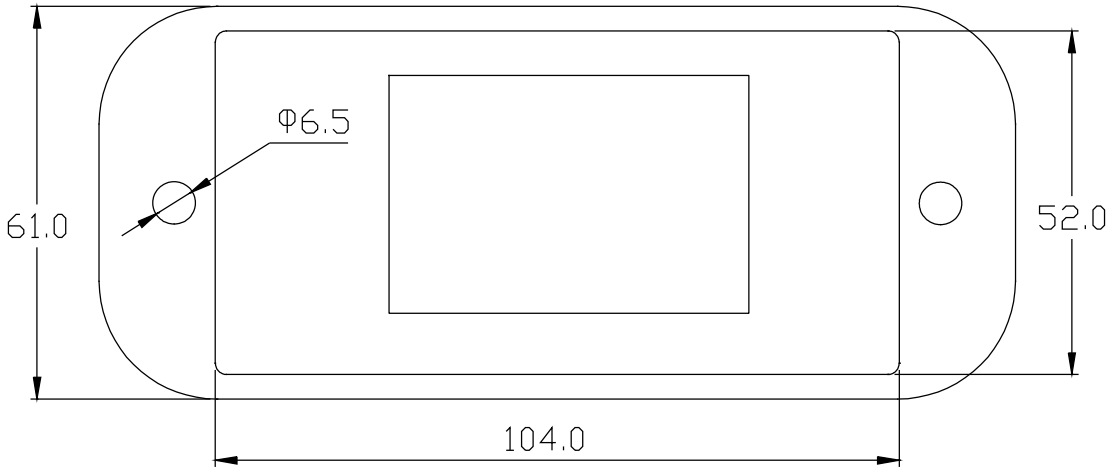
Φ6.5
61.0
52.0
104.0

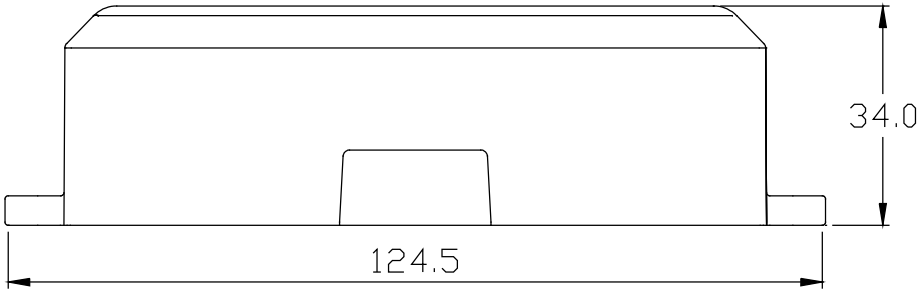
34.0
124.5

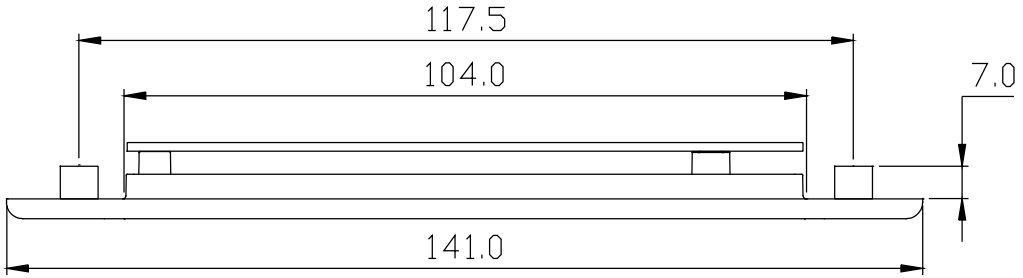
117.5
104.0
7.0
141.0